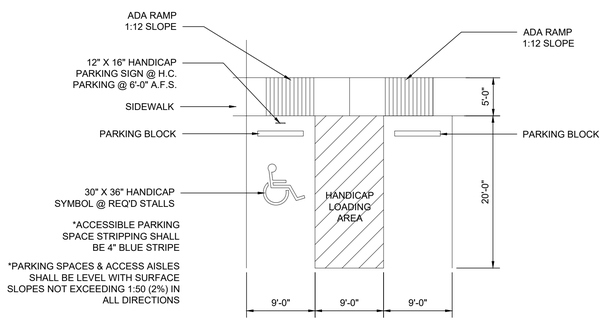

ACCESSIBLE PARKING STALL N.T.S. 2

*ARCHITECTURAL SITE PLAN IS FOR REFERENCE ONLY. OWNER TO ACQUIRE THE SERVICES OF A LICENSED CIVIL ENGINEER TO DEVELOP FINAL SITE DESIGN INCLUDING BUT NOT LIMITED TO ALL DRAINAGE REQUIREMENTS AND DESIGN: PARKING / DRIVE / SIDEWALK STANDARDS INCLUDING CONCRETE SPECIFICATIONS AND MIX DESIGNS, JOINT LAYOUTS AND DESIGN / ETC. CIVIL ENGINEER WILL BE RESPONSIBLE FOR LOCATING AND CONFIRMING ALL PROPERTY LINES, LOT LINES, SETBACKS, EASEMENTS, CENTER LINES FINAL BUILDING CORNERS AND ALL LOCAL AND STATE CODES PERTAINING TO THE CIVIL ENGINEERS SCOPE OF WORK.

*OWNER TO ACQUIRE THE SERVICES OF A LANDSCAPE ARCHITECT TO DEVELOP LANDSCAPED AREAS

REFER TO DEVELOPMENT PAVING SPECIFICATIONS FOR FINAL DESIGN STANDARDS:

PAVING NOTES: (FOR BIDDING PURPOSES ONLY)

1. ALL PARKING AND DRIVES SHALL BE CONCRETE, CAST IN PLACE, 4000 P.S.I. @ 28 DAYS COMPRESSIVE STRENGTH.
2. DRIVEWAY PAVING SHALL BE A MIN. THICKNESS OF 5 INCHES REINFORCED WITH 6 X 6 W2.9 X W2.9 WELDED WIRE FABRIC. PARKING STALL PAVING SHALL BE MINIMUM THICKNESS OF 4".
3. PLACEMENT AND CURING OF CONCRETE SHALL BE IN ACCORDANCE WITH THE LATEST A.C.I. RECOMMENDATIONS.
4. PROVIDE KEYED METAL JOINTS ON A STAGGERED 20'-0" X 20'-0" GRID (MAX.) PROVIDE EXPANSION JOINTS AT BUILDING, WALKS, LANDINGS AND STREET.
5. CURBS SHALL BE AS SHOWN ON PLANS AND/OR AS REQUIRED BY LOCAL AUTHORITIES.
6. PARKING STALLS SHALL BE MARKED WITH 4" WIDE WHITE PAINTED STRIPES. HANDICAPPED PARKING STALLS SHALL BE MARKED TO COMPLY WITH ADA AND ANSI REGULATIONS.
7. PROVIDE 8" THICK CONCRETE DRIVEWAY APRON FROM CONNECTION TO THE STREET TO THE RIGHT-OF-WAY LINE AS PER CITY-PARISH STANDARD.

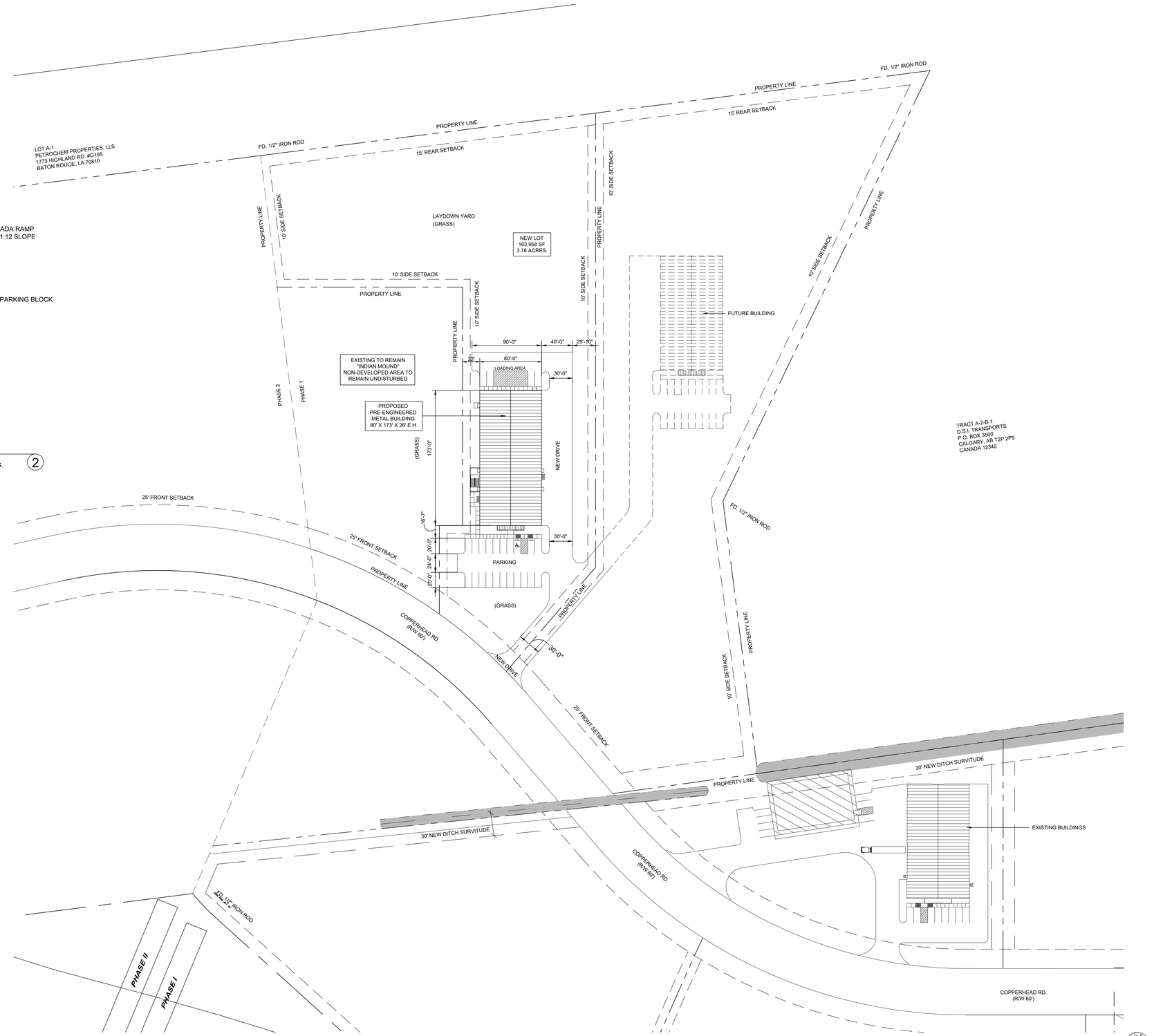

ARCHITECTURAL SITE PLAN 1/64"=1'-0" 1

MKE ARCHITECTS

Office Information:

Main Office: 225.412.0048
Fax: 225.412.0049
MKE Architects.com
9800 Airline Hwy.
Suite 217
Baton Rouge, La 70816

Consultants Information:

Structural:
Forte and Tablada
9107 Interline Avenue
Baton Rouge, LA 70809
Jason Fennell
(225) 927-9321

MEP:
GSE Engineers
Gulfport, MS
Justin Thibodeaux
(251) 459-6415

Project Notes:

BUILD-OUT
PERMIT SET

Project Title:

COPPERHEAD
HMT TANK 2.0

Project Location:
35030 HWY 30
GEISMAR, ASCENSION PARISH, LA

Sheet Revisions:

No.	Date	Description

Sheet Name:

SITE PLAN

Seal

MICHAEL KENNEDY
No. 30 "NA"
STATE OF LOUISIANA
REGISTERED ARCHITECT

Project Number:

19-27

Date:

MARCH 17, 2020

Document Phase:

CONSTRUCTION DOCUMENTS

Sheet Number:

A1.01

Copyright 2020 by MKE Architects, LLC